# USB to MIDI Chip CH345

Datasheet
Version: 1D
http://wch.cn

## 1. Introduction

CH345 is a chip which converts USB to MIDI. CH345 supports one MIDI signal input channel and two MIDI signal output channels. It is used to make USB MIDI keyboard, MIDI music playback, and convert MIDI electronic musical instrument to USB interface.

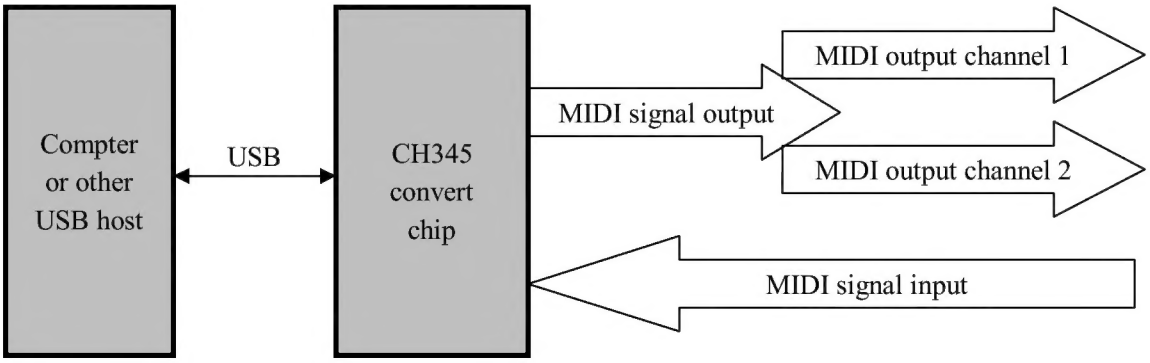


## 2. Features

- Full-speed USB device interface, compatible with USB V2.0, peripheral components only need crystal and capacitor.
- Provides one MIDI signal input channel and two MIDI signal output channels
- Complies with relevant specifications, free-driver under Windows 2000/XP and above OS.
- The input and output are at TTL level, can be directly connected to the MCU and supports the external optocoupler isolated transmission.
- Supports 5V, 3.3V and 3V supply voltage.
- SSOP-20 lead-free package, compatible with RoHS.

## 3. Package

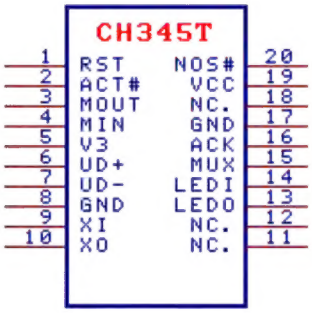


| Package | Width Of Plastic | | Pitch Of Pin | | Instruction Of Package | Ordering Information |
|---|---|---|---|---|---|---|
| SSOP-20 | 5.30mm | 209mil | 0.65mm | 25mil | Shrink small outline 20-pin patch | CH345T |

# 4. Pin Out

| Pin No. | Pin Name | Type | Pin Description |
|---|---|---|---|
| 19 | VCC | Power | Power supply voltage input<br>requires an external 0.1uF decoupling capacitor |
| 8, 17 | GND | Power | Ground |
| 5 | V3 | Power | Connect to VCC when VCC is 3V3,<br>connect to 0.1uF decoupling capacitor when VCC is 5V |
| 1 | RST | Input | External reset input, active high, built-in weak pull-down resistor. When not using the RST input reset, it is recommended that this pin directly connects to ground; when using the RST input reset, it is recommended to connect an external 2KΩ pull-down resistor |
| 9 | XI | Input | Input of crystal oscillator,<br>requires an external crystal and oscillation capacitor |
| 10 | XO | Output | Inverted output of crystal oscillator,<br>requires an external crystal and oscillation capacitor |
| 6 | UD+ | USB signal | Connect to USB D+ Signal directly |
| 7 | UD- | USB signal | Connect to USB D- Signal directly |
| 20 | NOS# | Input | Disable USB device to suspend,<br>active low, built-in pull-up resistor |
| 3 | MOUT | Output | MIDI signal output, active high |
| 4 | MIN | Input | MIDI signal input, active low, built-in pull-up resistor |
| 2 | ACT# | Output | USB configuration completed status output, active low |
| 13 | LEDO | Output | Status indicator control of MIDI output, active high |
| 14 | LEDI | Output | Status indicator control of MIDI input, active high |
| 15 | MUX | Output | Channel status of MIDI output,<br>channel 1 when low level, channel 2 when low level |
| 16 | ACK | Output | Receive respond of MIDI input,<br>active at the rising edge of high-level pulse |
| 11, 12, 18 | NC. | None | No connection, must be suspended |

# 5. Functional Specification

CH345 has a built-in USB pull-up resistor, and the UD+ and UD- pins shall be directly connected to the USB bus.

CH345 has a built-in power-on reset circuit.

When the chip is operating, it needs to provide an external 8MHz clock signal to the XI pin. Generally, the clock signal can be generated by the built-in inverter of CH348 through crystal frequency stabilization oscillation. The peripheral circuit only needs to connect a 12MHz crystal between the XI and XO pins, and the both pins connect to the ground with an oscillation capacitor respectively.

CH345 supports 5V or 3.3V supply voltage. When using 5V supply voltage, the VCC pin of the CH345 will input an external 5V power supply, and the V3 pin shall be connected to an external power decoupling capacitor with a capacity of about 0.1uF. When using 3.3V supply voltage, the V3 pin of the CH345 shall be connected to the VCC pin, and input an external 3.3V power supply at the same time, and the operating voltage of other circuits connected to CH345 cannot exceed 3.3V.

CH345 has a built-in firmware which will automatically support the USB device suspension to save the

power consumption. When the NOS# pin is at low level, the USB device suspension will be disabled.

ACT# pin of CH345 is the USB device configuration completed status output, and it is used to indicate that the USB device has been successfully connected to the computer.

MOUT pin of CH345 is used to output the MIDI signals of two channels from time division multiplexing. MUX pin is used to indicate the current output channel status. When using MOUT pin alone, it is a dual-channel mixed output. When combining with the MUX pin, it will divide out two output channels independently.

MIN pin of CH345 is used to input MIDI signal. When idle, it defaults to a high level. It can be directly connected to the MIDI output pin of the piano key MCU, or perform isolated transmission after adding external optocoupler. The ACK pin is to receive respond. CH345 will output a high-level pulse through the ACK pin after receiving a MIDI data byte whose width range from 1uS to 10uS.

CH345 complies with relevant technical specifications and supports plug-and-play. The Windows 2000/XP/Vista and above OS on the computer have been intergrated corresponding drive and can be used after connection.

CH345 can be used to make the USB MIDI keyboard, MIDI music playback device, or connect MIDI electronic musical instrument to the USB interface of a computer for recording and post-editing.

# 6. Parameters

## 6.1. Absolute Maximum Ratings

(Critical state or exceeding maximum can cause chip to not work or even be damaged)

| Name | Parameter Description | Min | Max | Unit |
|---|---|---|---|---|
| TA | Operating ambient temperature | -40 | 85 | ℃ |
| TS | Storage ambient temperature | -55 | 125 | ℃ |
| VCC | Supply voltage (VCC connects to power, GND to ground) | -0.5 | 6.0 | V |
| VIO | Voltage of the input or output pins | -0.5 | VCC+0.5 | V |

## 6.2. Electrical Parameters

(Test Conditions: TA=25℃, VCC=5V, Exclude pins connected to USB Bus)
(If the supply voltage is 3.3V, all current parameters in the table need to multiply the coefficient of 40%)

| Name | Parameter Description | | Min | Typ. | Max | Unit |
|---|---|---|---|---|---|---|
| VCC | Power supply voltage | V3 doesn't connect to VCC | 4.0 | 5 | 5.3 | V |
| | | V3 connects to VCC | 2.9 | 3.3 | 3.6 | |
| ICC | Operating supply current | | | 7 | 20 | mA |
| ISLP | Supply current (USB suspend) | VCC=5V | | 0.1 | 0.2 | mA |
| | | VCC=3.3V | | 0.09 | 0.15 | mA |
| VIL | Input low voltage | | -0.5 | | 0.7 | V |
| VIH | Input high voltage | | 2.0 | | VCC+0.5 | V |
| VOL | Output low voltage (4mA draw current) | | | | 0.5 | V |
| VOH | Output high voltage (3mA output current) (Only 100uA output current during chip reset) | | VCC-0.5 | | | V |
| IUP | Input current of the input with built-in pull-up resistor | | 4 | 150 | 300 | uA |
| IDN | Input current of the input with built-pull-down resistor | | -40 | -100 | -300 | uA |

| | | | | | |
|---|---|---|---|---|---|
| VR | Voltage threshold of power-on reset | 2.4 | 2.6 | 2.8 | V |

### 6.3. Timing Parameters

(Test Conditions: TA=25℃, VCC=5V)

| Name | Parameter Description | Mini | Typ. | Max | Unit |
|---|---|---|---|---|---|
| FCLK | Frequency of input clock signal on XI pin | 11.98 | 12.00 | 12.02 | MHz |
| TPR | Reset time of power-on | 20 | 35 | 50 | mS |

## 7. Applications

### 7.1. USB to Single-Channel MIDI

The figure below shows that USB converts to single-in single-out MIDI realized by CH345. P2 is a 5-pin MIDI output socket, and P3 is a 5-pin MIDI input socket. Triode T1 is used to reverse output the drive current, optocoupler U2 is used to realize the current isolation input, D1 is used to protect U2 when the input polarity is reversely connected, and LED1 is used to indicate the USB device ready status. LED L2 and L3 indicate the MIDI IN and OUT status respectively.

P 1 is a USB port. The USB bus includes a pair of 5V power lines and a pair of data signal lines. Generally, the +5V power line is red, the ground line is black, the D+ signal line is green, and the D- signal line is white. The maximum supply current provided by the USB bus can reach 500mA. Generally, CH345 and low-power USB products can directly use the 5V power supplied by USB bus. If the USB products use standing power provided by other supply methods, CH345 should also use the standing power. If the USB bus power is necessary at the same time, 5V power of USB bus is connected to the 5V standing power of USB product by connecting a 1Ω resistor, and directly connected to the ground lines of two powers.

The capacity of C3 is 0.1μF, which is used for internal power node decoupling of CH345, and the capacity of C4 is 0.1μF, which is used for external power decoupling. Crystal X1, capacitor C1 and C2 are used in the clock oscillation circuit. X1 is a quartz crystal with a frequency of 12MHz, and C1 and C2 are monolithic or high-frequency ceramic capacitors with a capacity of 22pF. If X1 selects a ceramic crystal with low-cost, the capacity of C4 and C5 must use the recommended value of crystal manufacturer and generally is 47pF. For crystals that are difficult to oscillate, it is recommended that the capacity of C1 shall be halved.

When designing the PCB, pay attention to: decoupling capacitor C3 and C4 get as close to connected pins of CH345; making sure D+ and D- signal lines are close to the parallel wiring and providing ground or copper on both sides to reduce signal interference from the outside; the signal line length of XI and XO pin should be keep as short as possible. In order to reduce the high frequency interference, arranging the ground or copper around the relevant components.

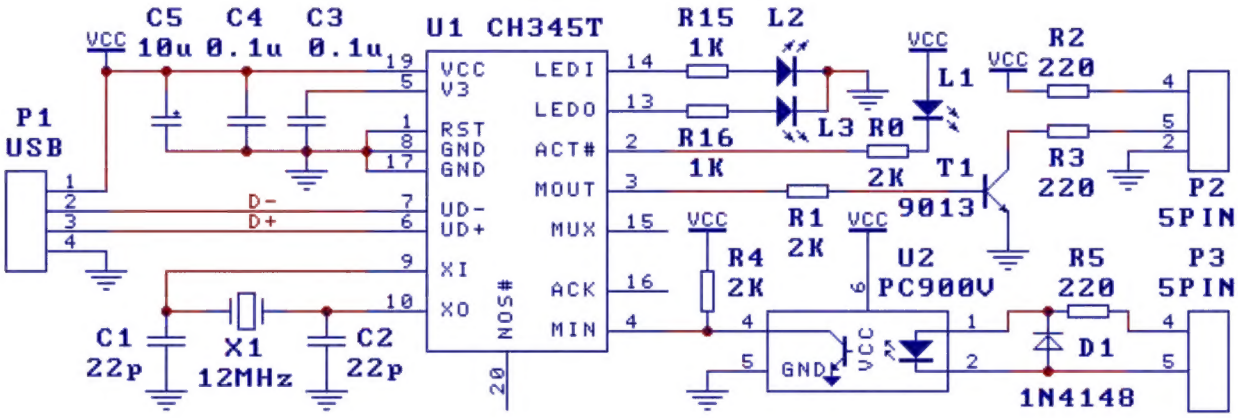

## 7.2. USB to Dual-Channel MIDI

The figure below shows that USB converts to single-in double-out MIDI realized by CH345. U4 is used to divide out two channel signals from the time division multiplexing MIDI output signal of CH345, and output them to two MIDI output sockets of P5 and P6 respectively.

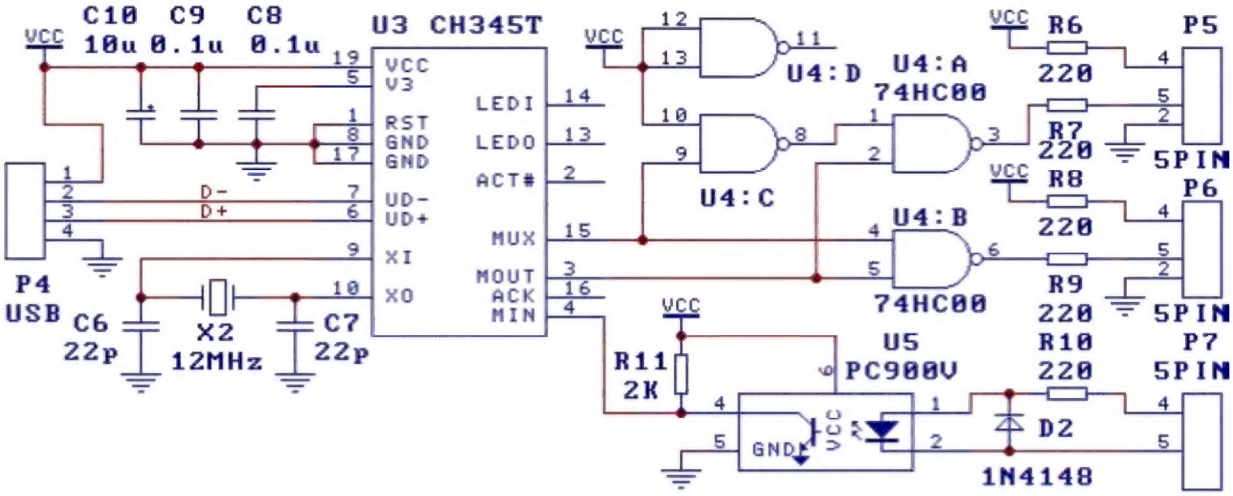


## 7.3. USB to Non-Isolated MIDI

The figure below shows that USB converts to non-isolated MIDI with TTL level, P9 is similar to the 15-pin GAME/MIDI port of computer.

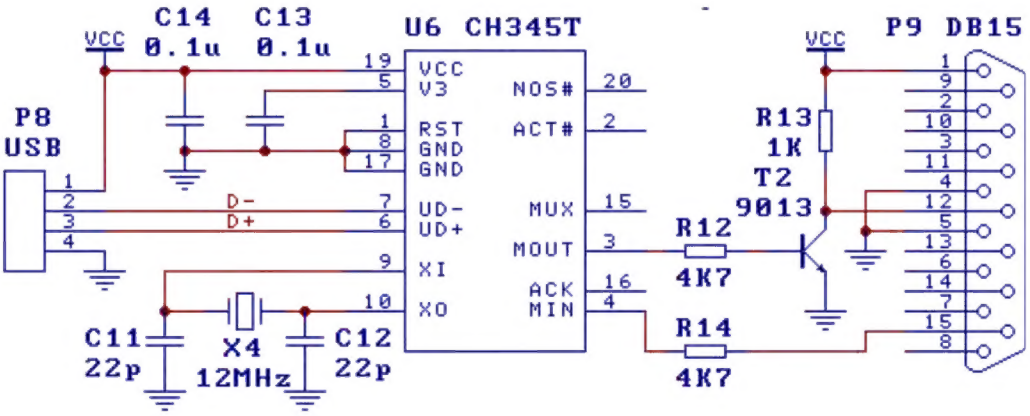


## 7.4. MIDI Keyboard

The figure below shows a USB MIDI keyboard composed of CH345 and MCS51 MCU. TXD of U8 outputs MIDI data to the MIN pin of CH345. If necessary, the MCU can sample the ACK pin of CH345 to check whether CH345 has received data.

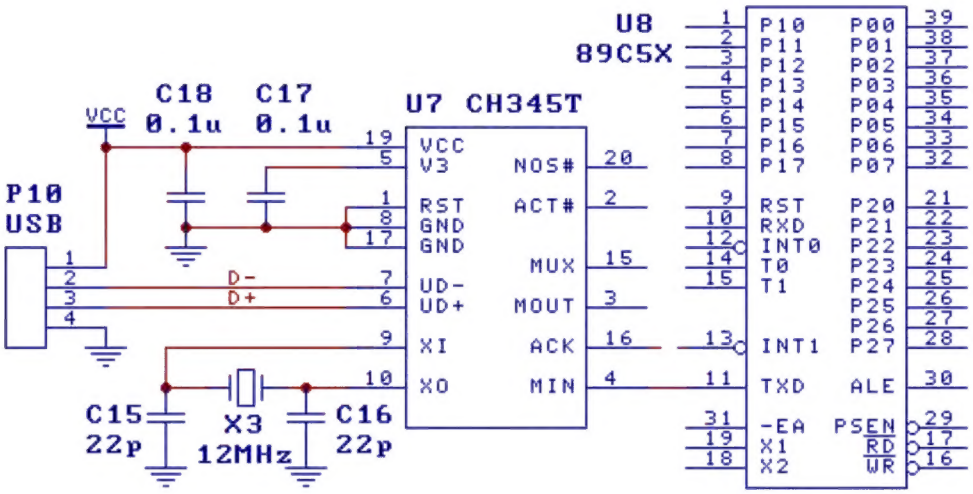
U8
89C5X
U7 CH345T
P10
USB
VCC
C18
0.1u
C17
0.1u
D-
D+
C15
22p
X3
12MHz
C16
22p
VCC
V3
RST
GND
GND
UD-
UD+
XI
XO
NOS#
ACT#
MUX
MOUT
ACK
MIN
P10
P11
P12
P13
P14
P15
P16
P17
RST
RXD
INT0
T0
T1
INT1
TXD
-EA
X1
X2
P00
P01
P02
P03
P04
P05
P06
P07
P20
P21
P22
P23
P24
P25
P26
P27
ALE
PSEN
RD
WR